Non-Intrusive Online Timing Analysis of Large Embedded Applications

Boris Dreyer, Christian Hochberger

Boris Dreyer
dreyer@rs.tu-darmstadt.de

Prof. Dr.-Ing. Christian Hochberger
Computer Systems Group
Department of Electrical Engineering and Information Technology
Technische Universität Darmstadt, Germany

Agenda

- **Execution Time Profiles**
- **Histograms**
  - Scalable histogram algorithm
  - Debie1 evaluation
- **Hardware platform**
  - Feasibility and performance
- **Conclusion**

What do we want to do?

TECHNISCHE UNIVERSITÄT DARMSTADT

Profile large embedded application

non-intrusive

- No code instrumentations
- No altering of timing behavior

online

- Profiling while the target system executes the application

using ETPs

- Execution time profiles (ETP)
- Execution time propability distribution

Design Decisions

TECHNISCHE UNIVERSITÄT DARMSTADT

Profile large embedded application

non-intrusive — Using trace-port of modern microcontrollers

online — Processing trace-events in hardware

using ETPs — Generate histograms in hardware

Execution Time Profiles (ETPs)

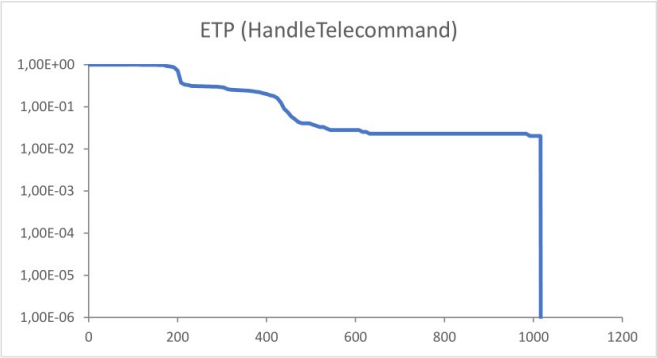

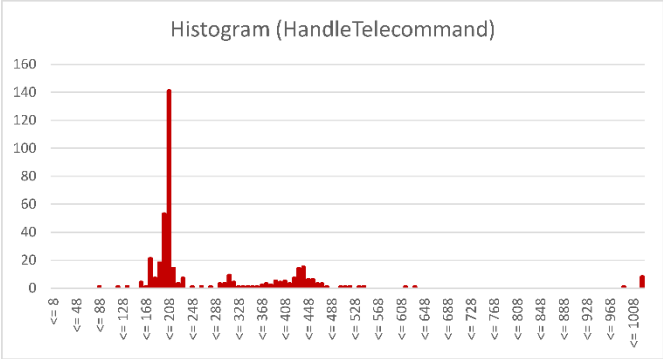

Execution Time Profiles help us with:

- Probabilistic schedulability analysis: ETPs are used to calculate response time distribution
- Scheduling tasks while maintaining a given quality of service level

Timing Analysis Platform

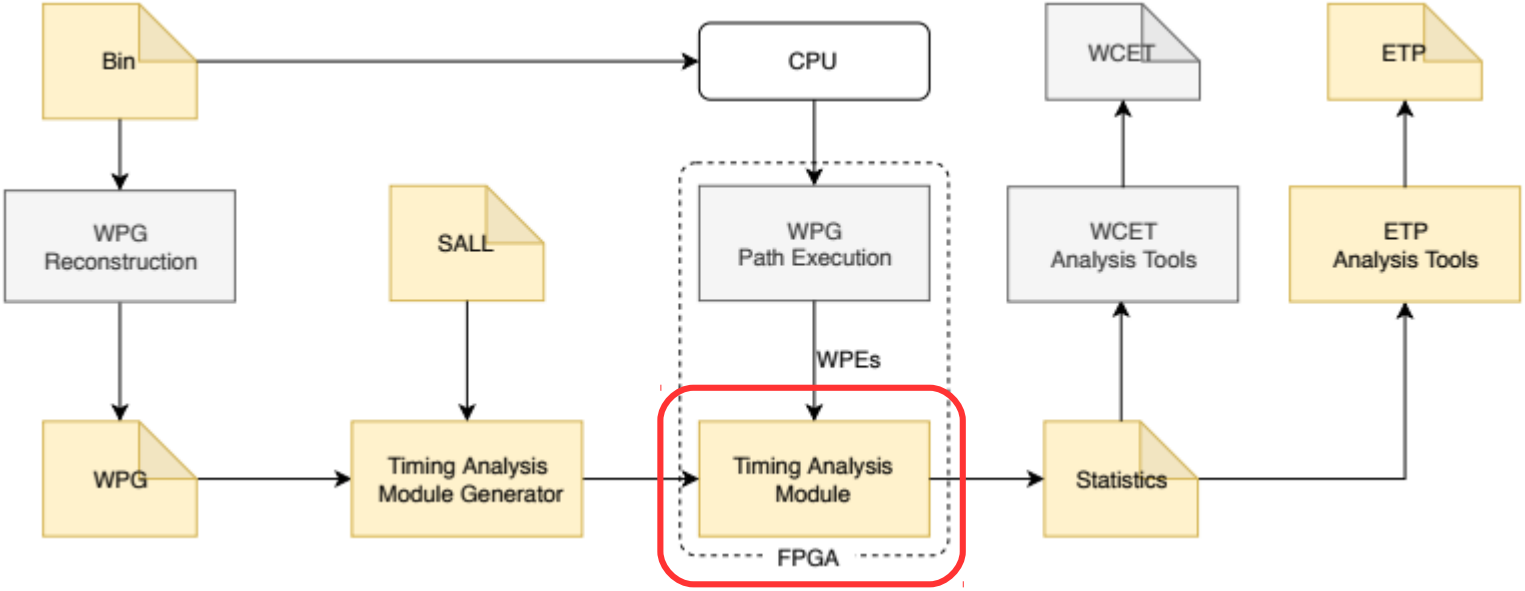

How to compute execution time histograms in hardware?

How to compute histograms of data with unknown value ranges in hardware?

Scalable Histogram Algorithm Example

TECHNISCHE UNIVERSITÄT DARMSTADT

Requirements

- Small constant amount of bins
- Try to keep bin sizes small
- Assign each measured value to a bin

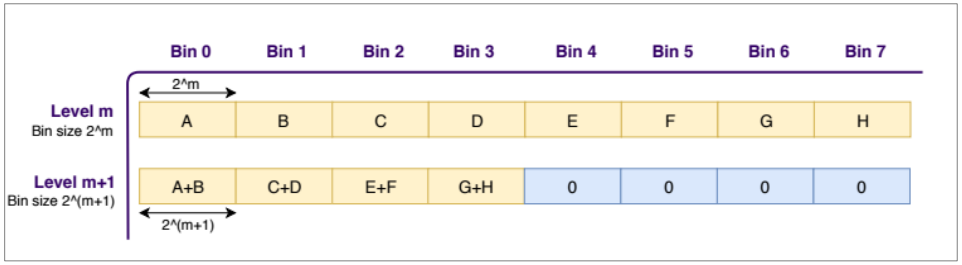

One compression step

Event sequence <5,4,11,7,54,10>

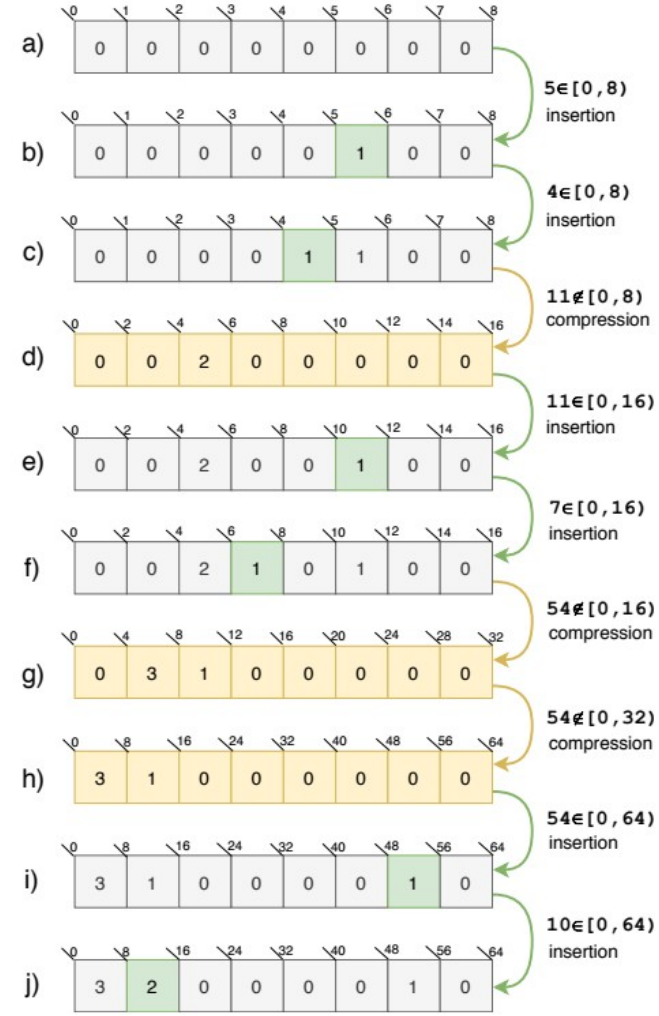

Statistics Storage

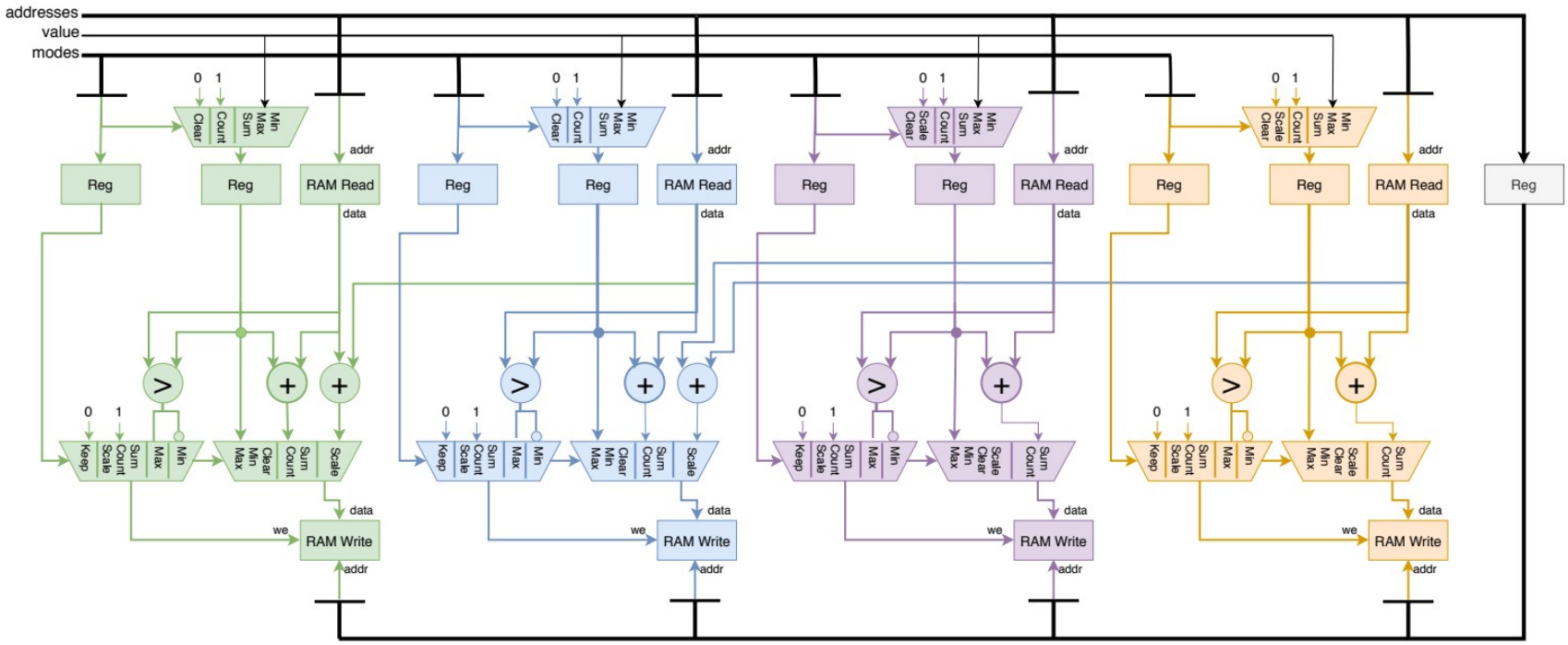

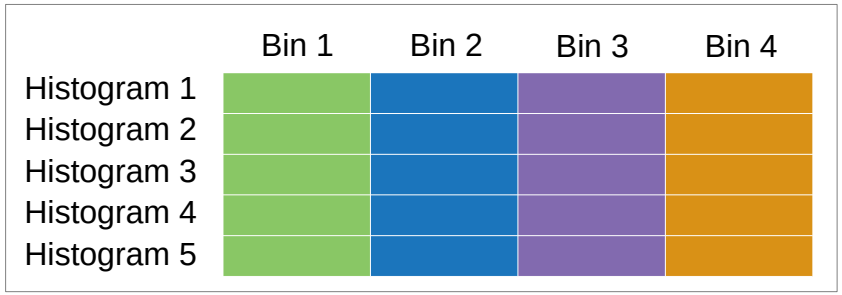

Timing Analysis Module

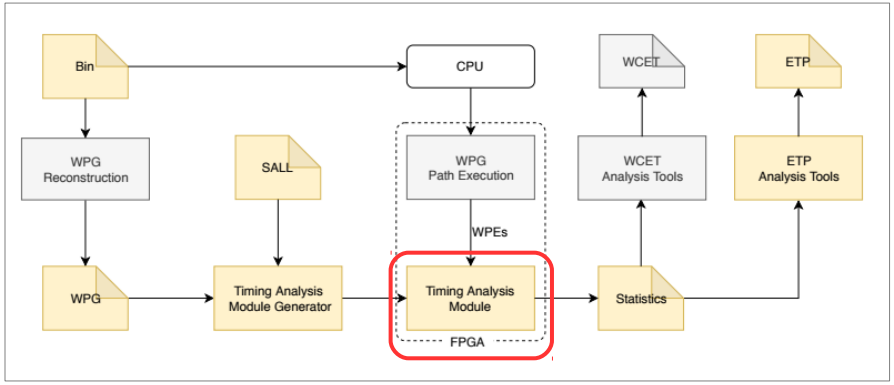

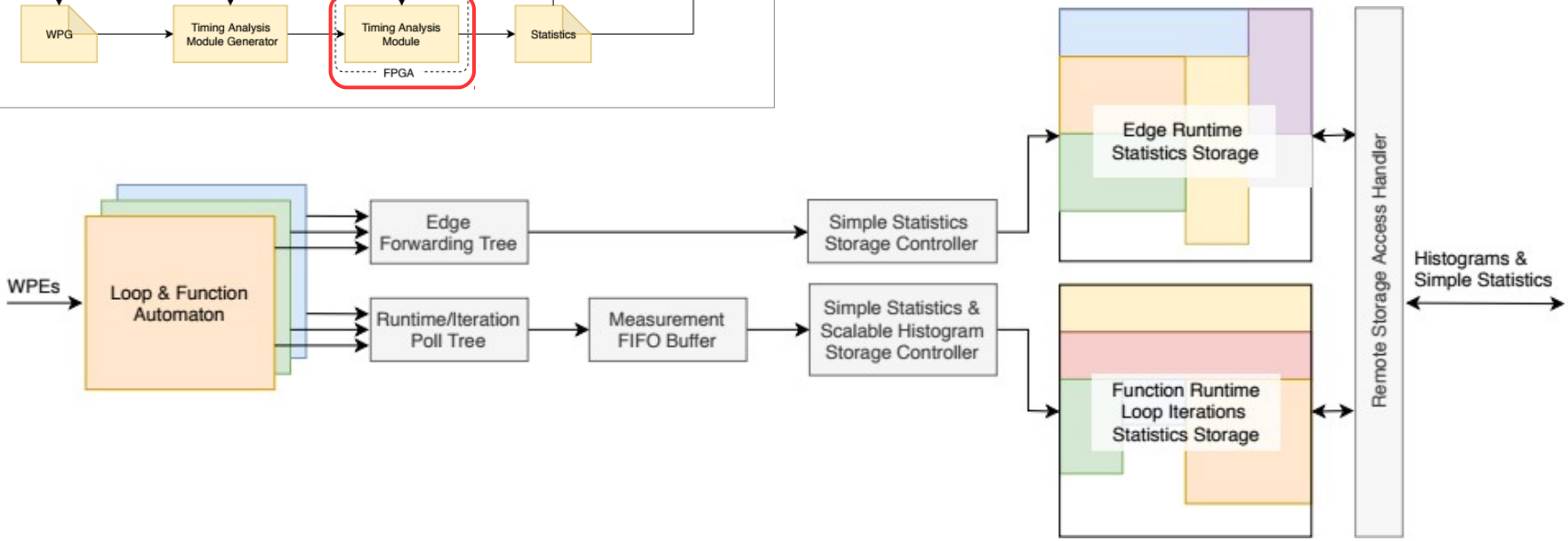

How fast can the Timing Analysis Module process waypoint edge events (WPEs)?

Timing Analysis Module

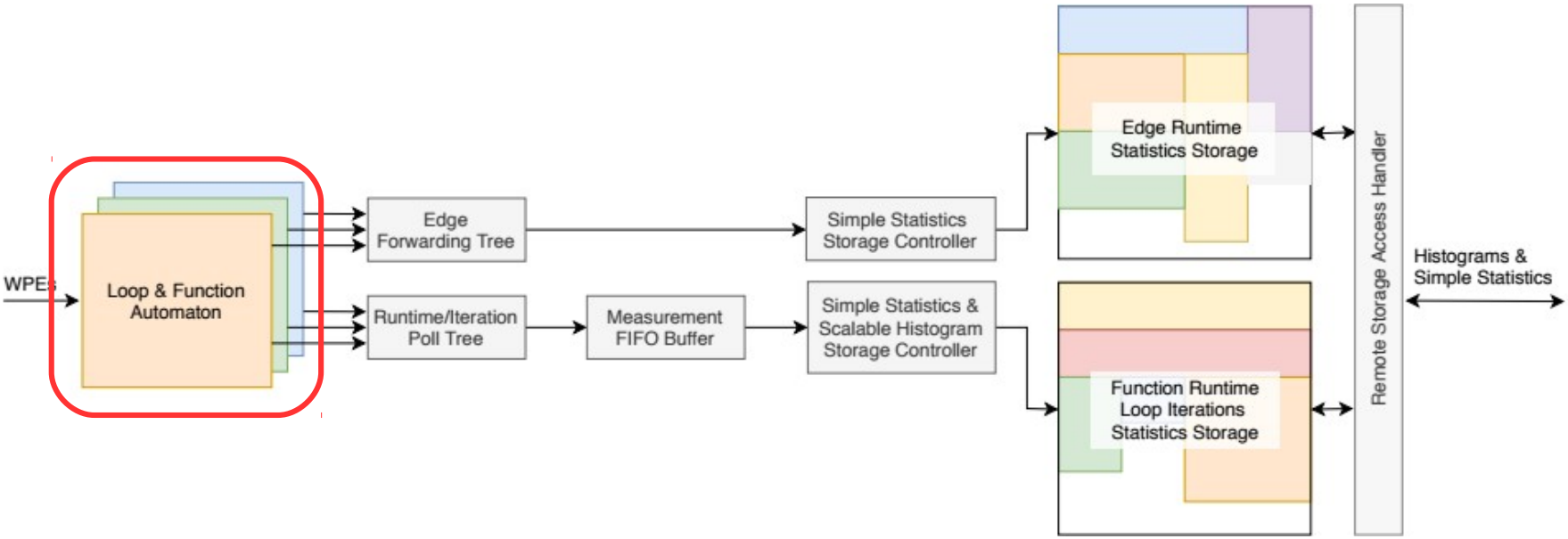

Loop and Function Automaton

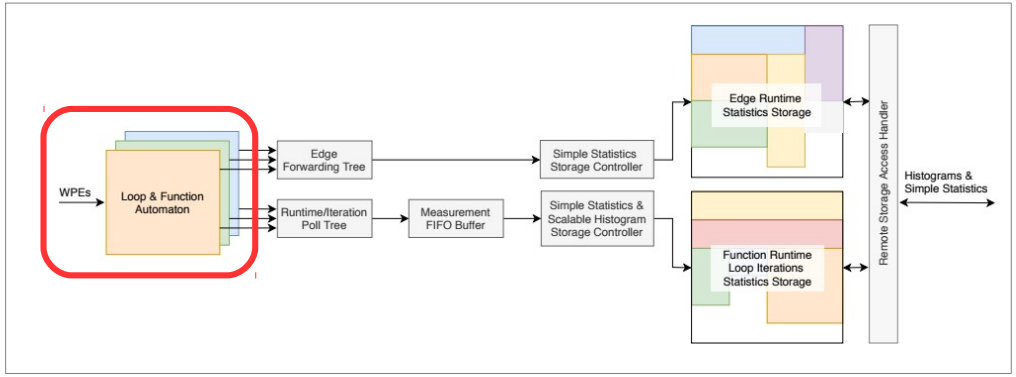

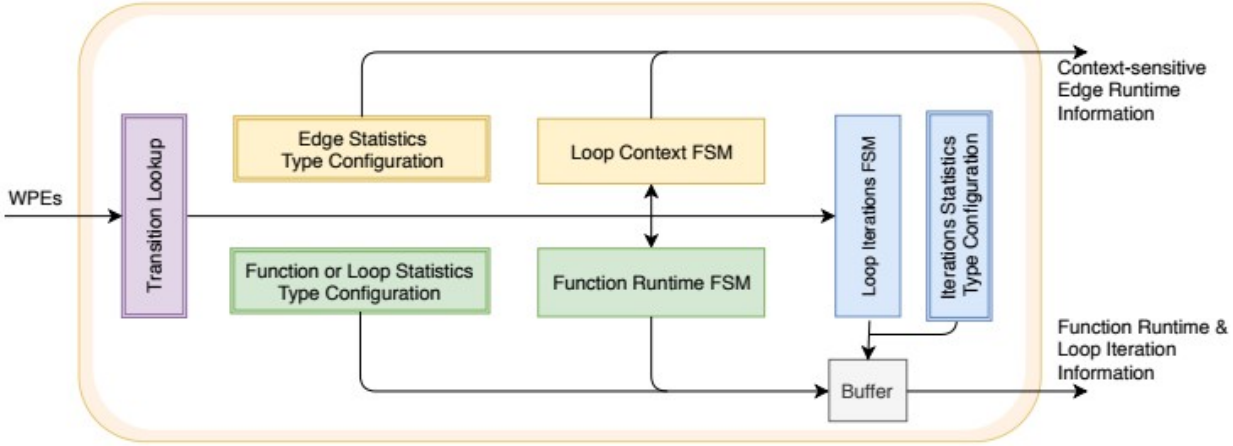

Models one function or one loop

Timing Analysis Module

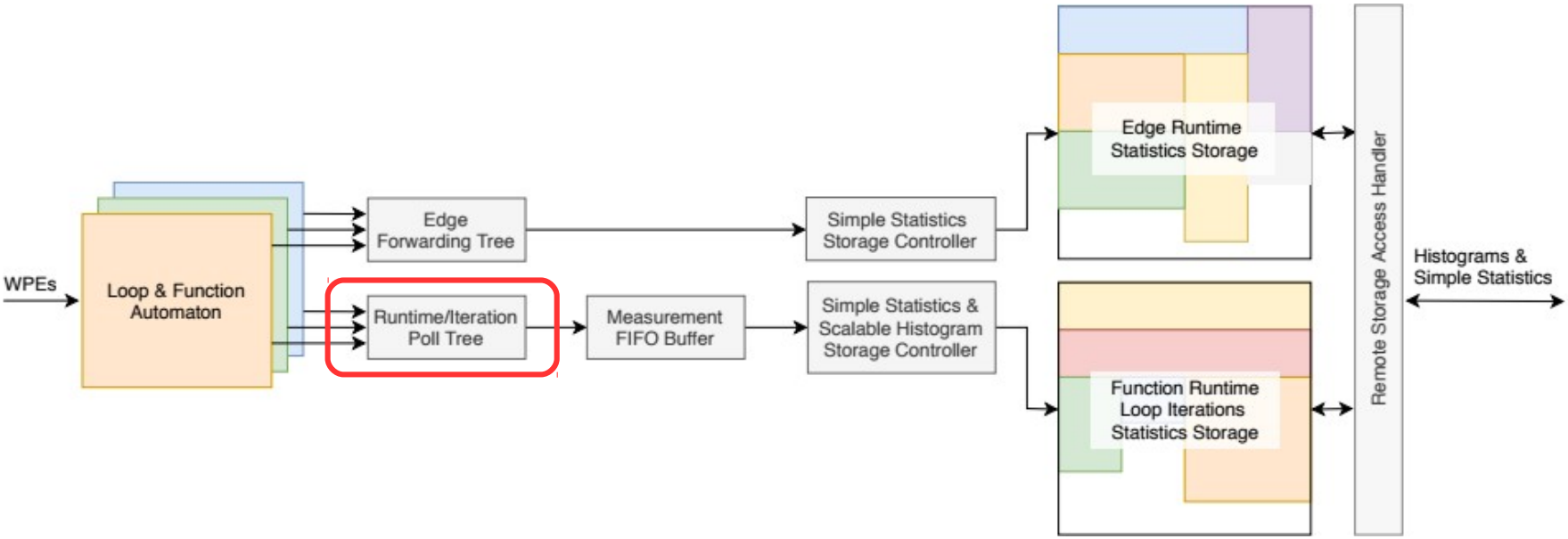

Timing Analysis Module

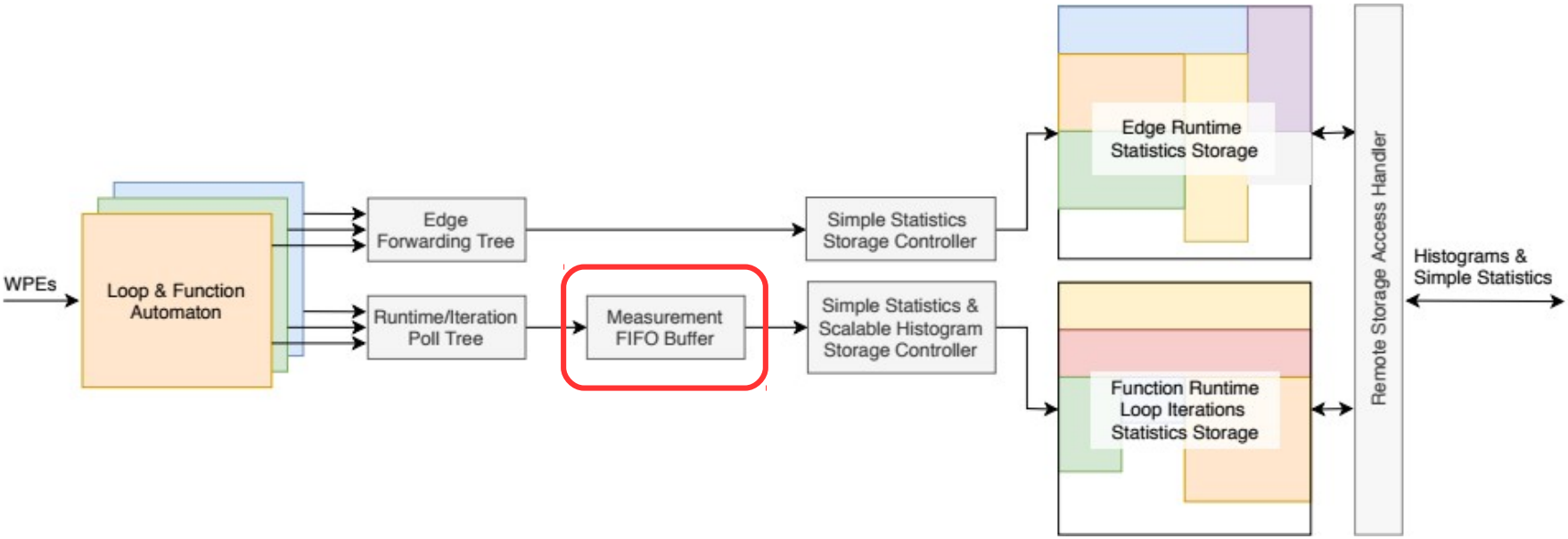

Timing Analysis Module

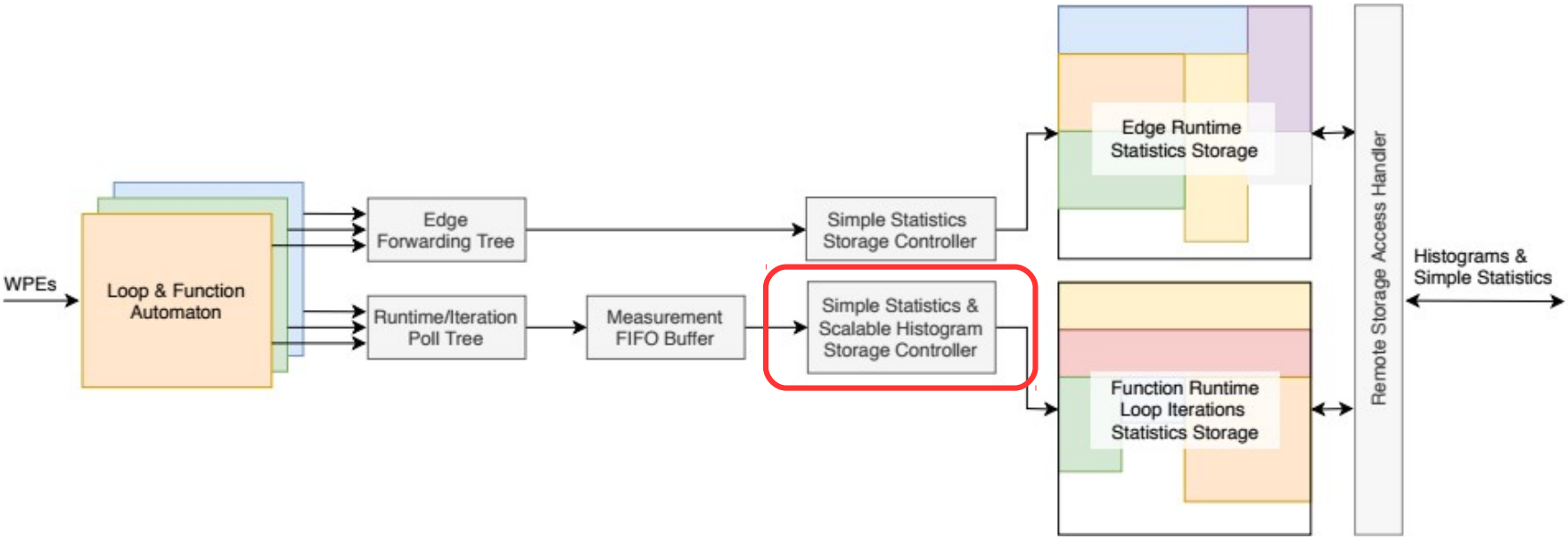

Timing Analysis Module

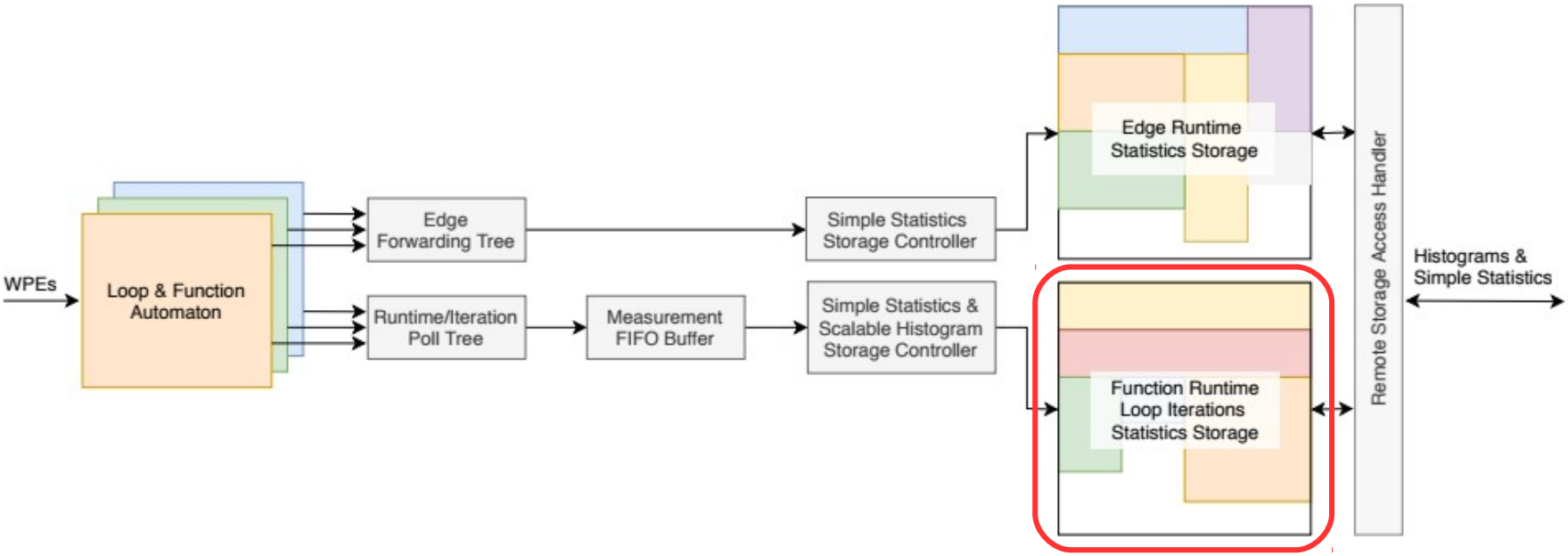

Timing Analysis Module

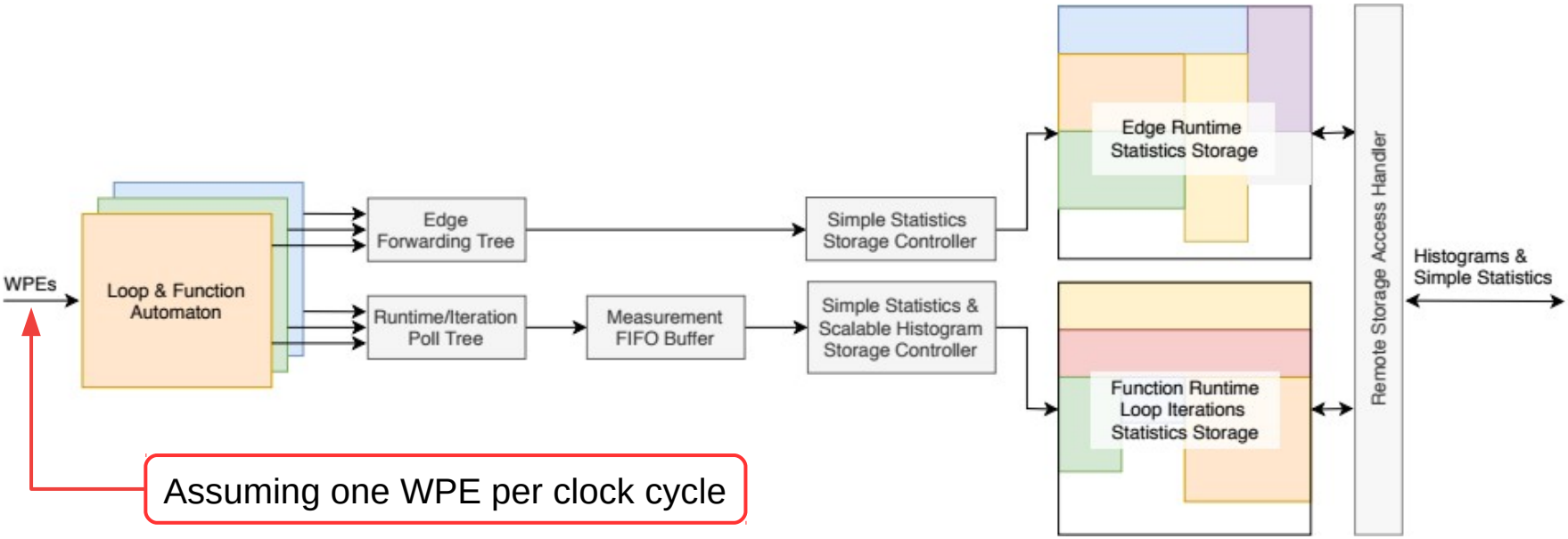

How fast can the Timing Analysis Module process waypoint edge events (WPEs)?

Measurement FIFO Buffer Utilization

Debie1 Benchmark

- 68 loops
- 172 functions
- 70,000,000 WPEs

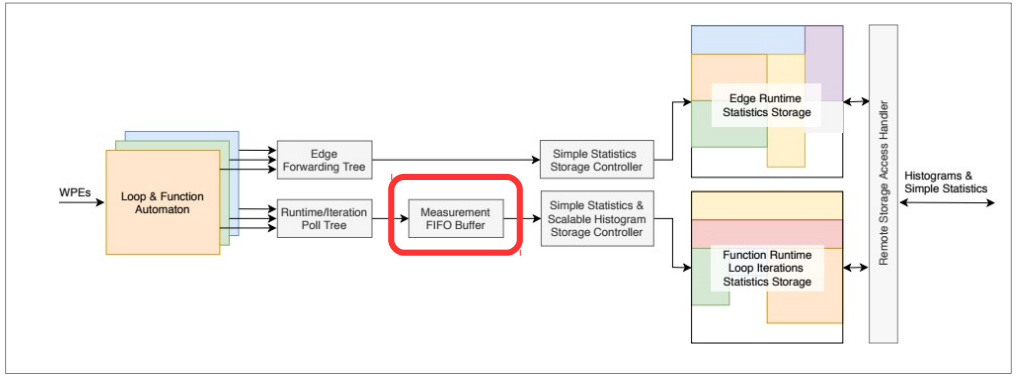

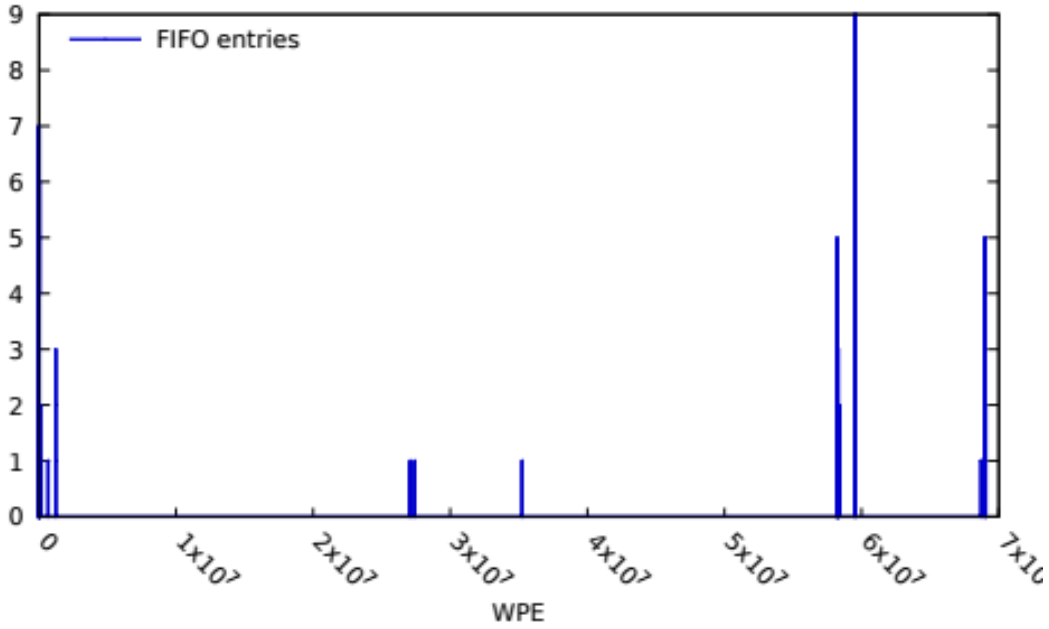

Debie1 Benchmark

Using the Debie1 benchmark

- Onboard software of the DEBIE-1 satellite
- Consists of 4 tasks and 2 interrupt service routines

Target Hardware:

- Xilinx Zynq XC7Z020
  - dual-core ARM Cortex-A9 @667Mhz
  - separate L1 Caches, shared L2 Caches
- Debie1 on one core, on the second core a custom benchmark in a FreeRTOS instance for generating interference on the shared L2 cache

Debie1 Tasks

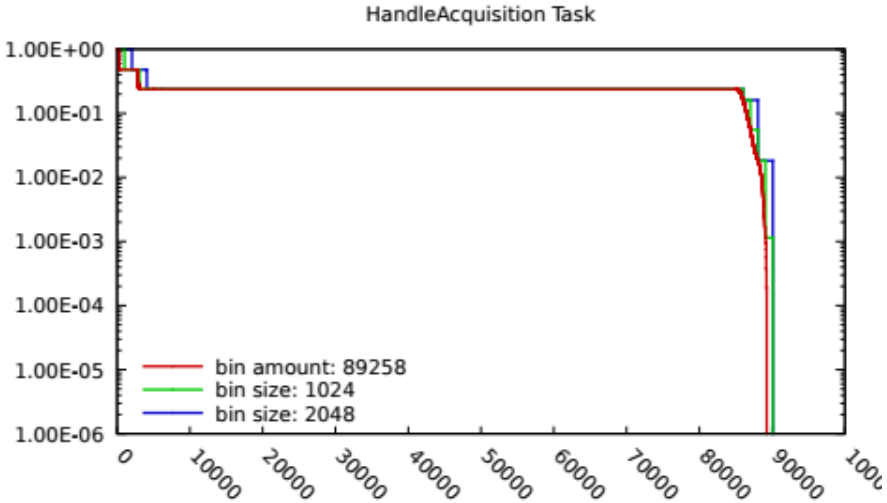

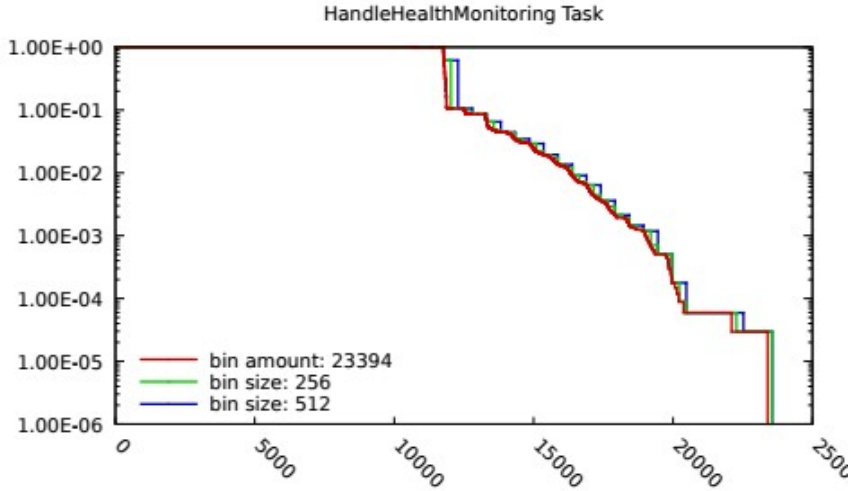

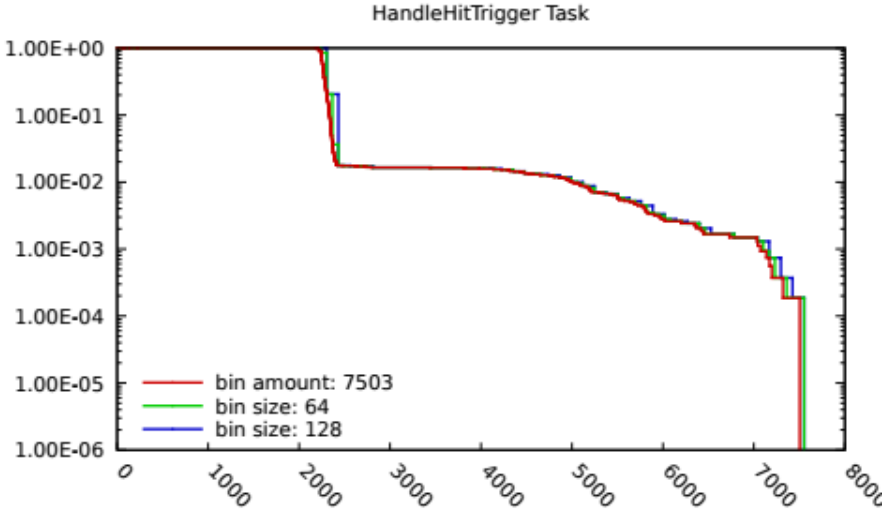

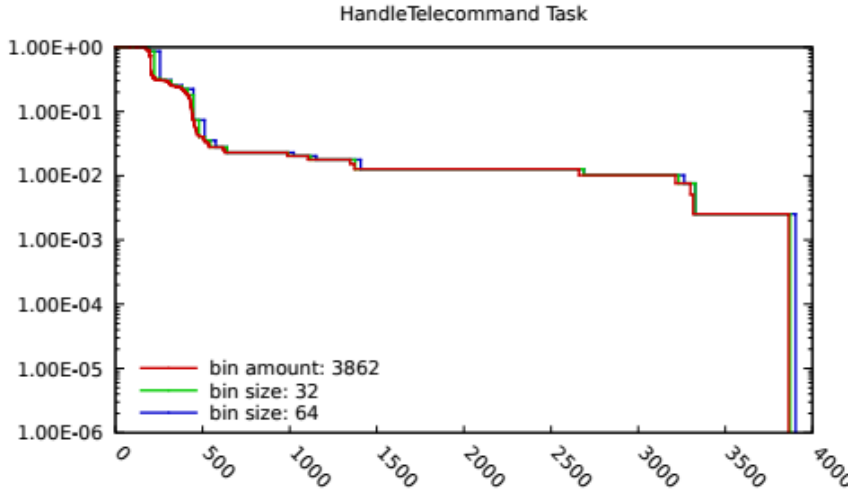

128 bins 64 bins

Conclusion

TECHNISCHE UNIVERSITÄT DARMSTADT

Achievements

- ✓ Histograms are an efficient way to store execution times
- ✓ Creation of histograms on dedicated hardware in real time
- ✓ Practical unlimited observation time

- ✓ No previous runtime information requried
- ✓ Creation of histograms in one analyzing pass

Thank you!